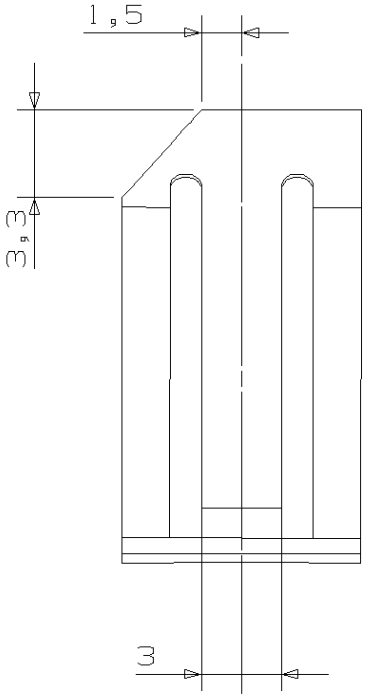

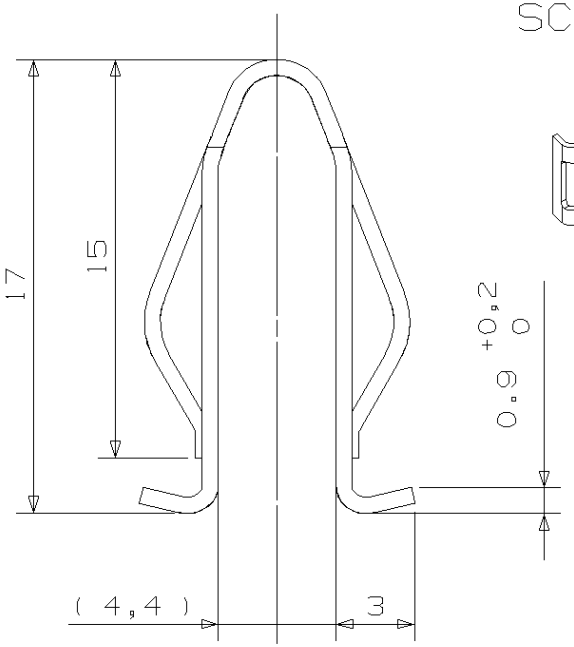

ISO VIEW
SCALE 2:1

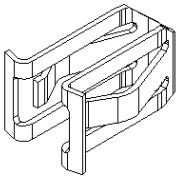

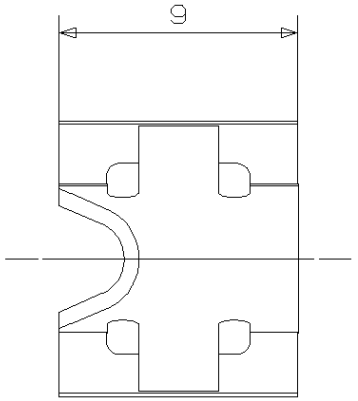

http://www.cergy-vis.fr
[CERGY-VIS]
ET SI ON PARLAIT SERVICE

SERVE SOLO PER INFORMAZIONE
IT USES ONLY FOR INFORMATION

212576.001

FINITO DI TEMPRA

DISEGNO REALIZZATO CON UNIGRAPHICS 3D,NON SONO AMMESSE MODIFICHE MANUALI /
THIS DRAWING IS MADE BY UNIGRAPHICS 3D, MANUAL MODIFICATIONS ARE NOT POSSIBLE

ESEMPIO D'IMPIEGO / EXAMPLE OF APPLICATION:

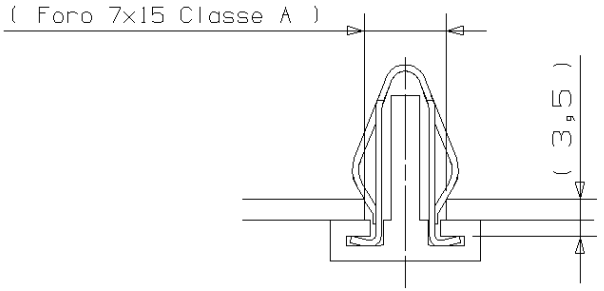

IND	N. QUOTE	DESCRIZIONE / DESCRIPTION	DATE	NAME	
C.	**	AGGIORNATO GRAFICO	26/10/09	ZP	VS
B.	1	VARIATO SMUSSO	26/09/08	PF	GC
A.	**	ELIMINATO SMUSSO SU PUNTA	22/07/08	GC	GC

MODIFICHE / MODIFICATIONS

A.Raymond
A.Raymond Italiana s.r.l.
Strada Prov.le To-Svizzera 41-13040 CARISIO (VC) - Tel.016193731/Tix 222439/Fax 0161971058

CONDITIONS OF USE

This drawing and all information (the Drawing) disclosed are the exclusive property of A.Raymond.
By using this Drawing the Addressee acknowledge and accept that this Drawing
(1) is covered by A.Raymond intellectual property rights or know-how and
(2) is provided under the following conditions who represent a Deposit Agreement.
This Drawing is for Addressee internal use only limited to its estimation. Without prior written consent of A.Raymond,
no permission or rights for any purpose, is hereby granted, such as, without any limitation,
(1) and/or the reproduction in part or entirely, to any other third party outside the Addressee company or in the company but with no interest
(2) and/or the presentation, in part or entirely, to any other third party outside the Addressee company or in the company but with no interest
(3) and/or the distribution of the Drawing, in part or entirely, in any medium
(4) and/or the creation of any derivative work.
In case of breach of these conditions, Addressee shall indemnify A.Raymond from and against all damages (compensatory or consequential), costs, expenses and charges, including attorneys' fees, which A.Raymond may incur or attributable to its wilful misconduct.
Product, Patents, Patent applications, Industrial Property Rights, Copyrights.
If the Addressee does not accept these conditions, please notify A.Raymond sender immediately.

Per problemi di incomprensione, prego richiedere la versione Italiana ad A.Raymond prima dell'utilizzo del disegno.

CLIENTE/CUSTOMER:
RIFERIMENTO/NUMBER:

BREVETTI / PATENTS:

DATA / DATE: 18/07/08

FORMAT A3

DISEGN./DESIGNER: CHIORBOLI

SCALA / SCALE: 5:1

U.T.P.: CHIORBOLI

GENERAL TOLERANCE

QUOTE / DIMENSIONS	ANGOLI / ANGLES
±0.5	±5°

U.T.O.: MAGA

PRODUZ./PRODUCT.: VARALDA

PESO / WEIGHT: (g)

TH.-VOL. (mm-mm³) 0.6

QUALITA'/QUALITY: CASCIANO

TRATTAMENTO SUPERFICIALE O COLORE / SURFACE TREATMENT OR COLOR:
FOSFATATO FAR Z 10M
(CAP.FIAT 9.57408)

TRATTAMENTO / TREATMENT:
TEMPRA BAINITICA
(HRC 42 - 46)

MATERIALE / MATERIAL:
ACCIAIO C67 S
UNI EN 10132-4

DENOMINAZIONE / PARTNAME:
MOLLETTA RITEGNO
FINIZIONI

PROD.LINE: 01 | PROD. FAMILIES: 30

NUMERO / NUMBER: 212576.000 C